DMF-P1



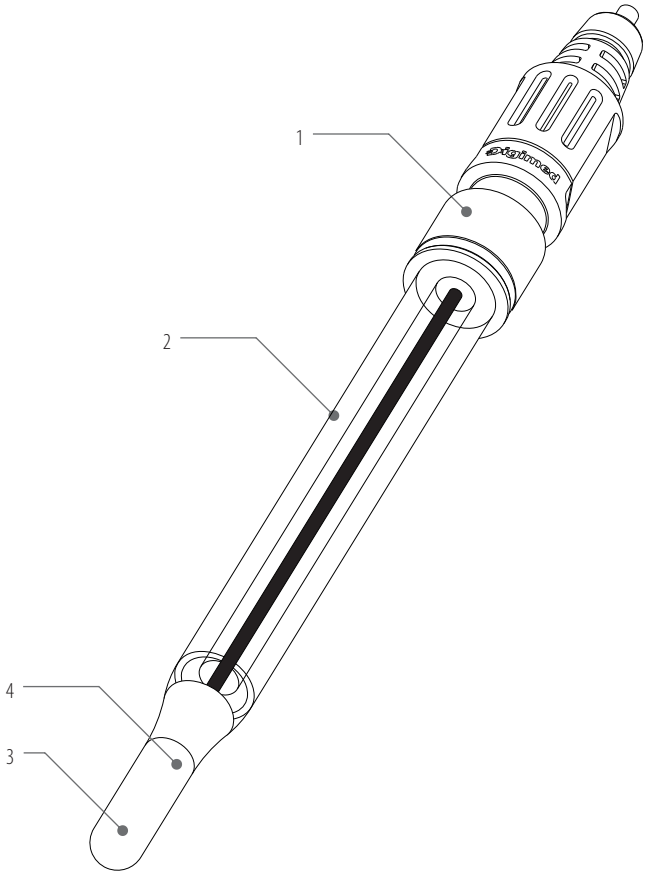

DMF-P1	
Temperature	-20 to 200 °C
Type	Pt-100
Body material	Glass
Application	Compensation or measurement of temperature in pH and other applications

Item	Description
1	Head
2	Glass body
3	Thermo
4	Silicone paste

Optional connectors



DM-AS7 Connector for use in electrodes with S7 or S7H8 head

BNC Bayonet type connector, used in pH electrodes without thermo

MINI-DIN / **DM-DIN** Used in pH electrodes

PA Connector for use in electrodes or cells with IP-67 enclosure

Banana Connector diameter of 2 or 4mm , used in reference electrodes

Optional heads



K2 head with cable, used for aggressive applications

PRO head with an 6 pin connector for applications with electrodes or cells + thermo

S7H8 head with an 2 pin connector, with screw thread for direct installation in probes

S7 head with an 2 pin connector, with removable cable for facility in electrode removal.